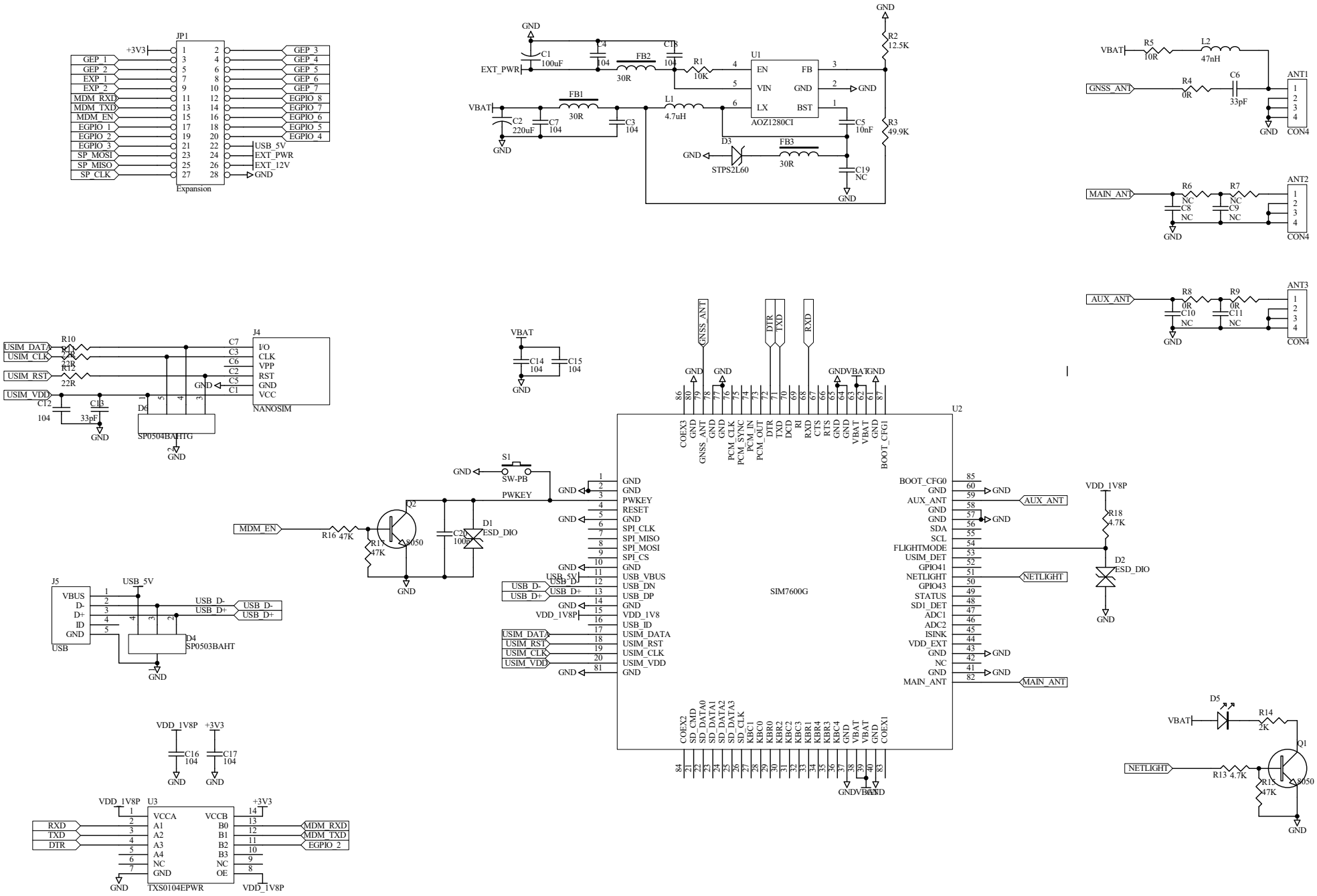

Title		
Size A3	Number	Revision
Date: 11-Oct-2021	Sheet of	
File: C:\Users\Administrator\Desktop\硬件资料\OV	Drawn By:	