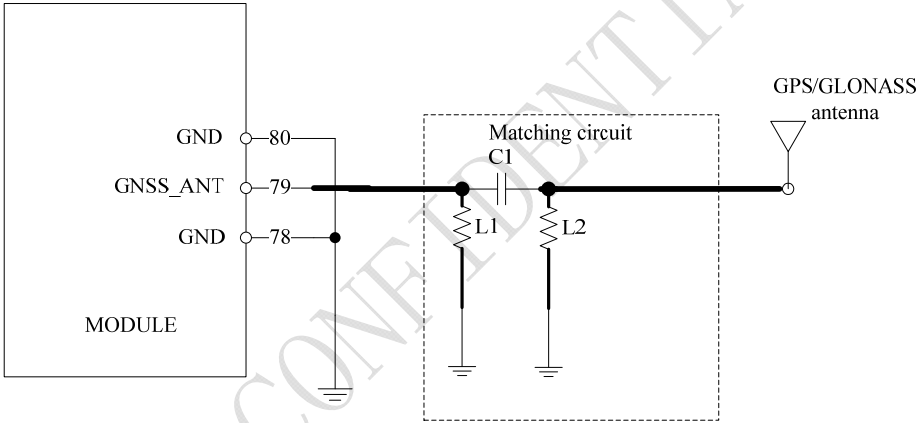

Figure 38：Passive antenna circuit (Default)